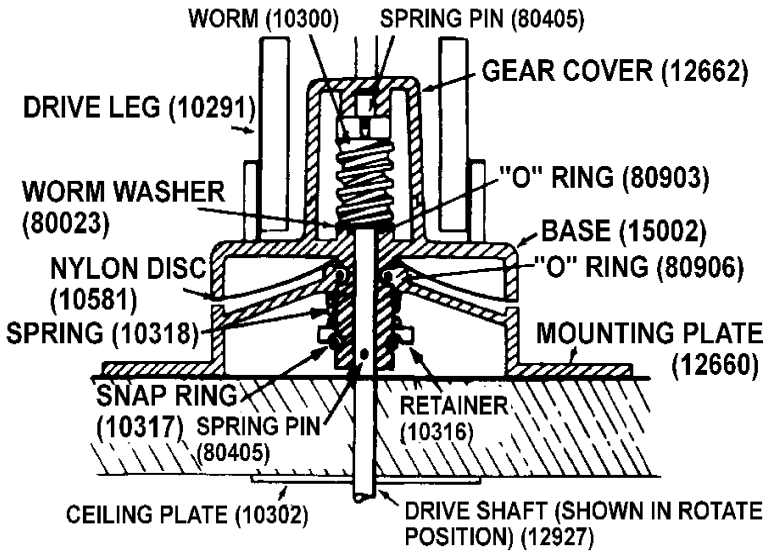
WORM (10300)
SPRING PIN (80405)
GEAR COVER (12662)
DRIVE LEG (10291)
"O" RING (80903)
WORM WASHER (80023)
BASE (15002)
NYLON DISC (10581)
"O" RING (80906)
SPRING (10318)
MOUNTING PLATE (12660)
SNAP RING (10317)
SPRING PIN (80405)
RETAINER (10316)
CEILING PLATE (10302)
DRIVE SHAFT (SHOWN IN ROTATE POSITION) (12927)