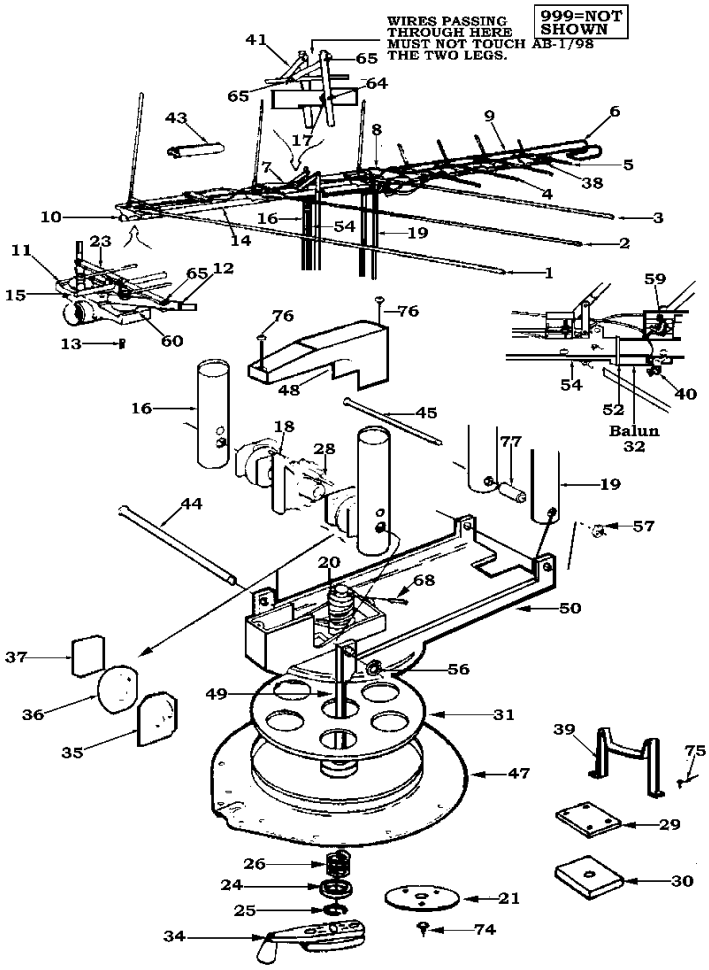
WIRES PASSING THROUGH HERE MUST NOT TOUCH THE TWO LEGS.
999=NOT SHOWN
AB-1/98
41
65
64
65
43
17
8
9
6
7
5
38
4
10
16
54
19
3
14
2
11
23
65
12
1
15
59
76
76
13
60
48
54
40
52
Balun
32
16
45
18
28
77
19
44
57
20
68
50
37
56
36
49
31
35
39
75
47
29
26
24
21
30
25
34
74